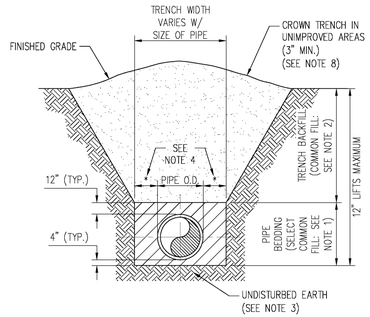

NOTES:

1. PIPE BEDDING: SELECT COMMON FILL COMPACTED TO 98% OF THE MAXIMUM DENSITY AS PER AASHTO T-180 AND CONTAINING NO MORE THAN 5% PASSING #200 SIEVE.
2. TRENCH BACKFILL: COMMON FILL COMPACTED TO 98% OF THE MAXIMUM DENSITY AS PER AASHTO T-180 AND CONTAINING NO MORE THAN 5% PASSING #200 SIEVE.
3. PIPE BEDDING UTILIZING SELECT COMMON FILL OR BEDDING ROCK IN ACCORDANCE WITH TYPE A BEDDING AND TRENCHING MAY BE REQUIRED AS DIRECTED BY THE CITY OF WINTER GARDEN.
4. (*): 15" MAX. FOR PIPE DIAMETER LESS THAN 24", AND 24" MAX. FOR PIPE DIAMETER 24" LARGER.
5. WATER SHALL NOT BE PERMITTED IN THE TRENCH DURING CONSTRUCTION.
6. ALL PIPE TO BE INSTALLED WITH BELL FACING UPSTREAM TO THE DIRECTION OF THE FLOW.
7. REFER TO SECTION 32.5 OF THE CITY OF WINTER GARDEN MANUAL OF STANDARDS AND SPECIFICATIONS FOR WASTEWATER AND WATER MAIN CONSTRUCTION FOR SHEETING AND BRACING IN EXCAVATIONS.
8. FINAL RESTORATION IN IMPROVED AREAS SHALL BE IN COMPLIANCE WITH ALL APPLICABLE REGULATIONS OF GOVERNING AGENCIES. SURFACE RESTORATION WITHIN CITY OF WINTER GARDEN RIGHT-OF-WAY SHALL COMPLY WITH REQUIREMENTS OF RIGHT-OF-WAY UTILIZATION REGULATIONS AND ROAD CONSTRUCTION SPECIFICATIONS.

1 STANDARD BEDDING DETAIL
N.T.S.

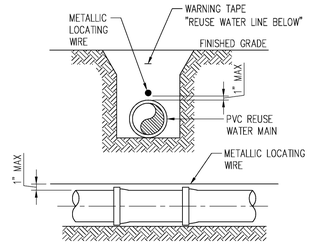

NOTES:

1. PVC PIPE SHALL REQUIRE INSULATED METALLIC LOCATING WIRE (10 GAUGE COPPER) CAPABLE OF DETECTION BY A CABLE LOCATOR AND SHALL BE ATTACHED TO THE TOP OF PIPE WITH DUCT TAPE, AT LEAST 5 TIMES PER JOINT.
2. LOCATING ROD SHALL TERMINATE AT THE TOP OF EACH VALVE BOX AND BE CAPABLE OF EXTENDING ABOVE TOP OF BOX $\frac{3}{4}$" SO AS NOT TO INTERFERE WITH VALVE OPERATION.

2 PVC PIPE LOCATING WIRE DETAIL
N.T.S.

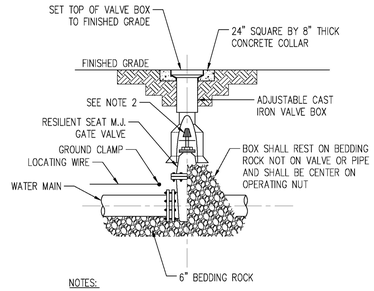

NOTES:

1. PVC EXTENSIONS SHALL NOT BE USED ON VALVE BOX INSTALLATION.
2. THE ACTUATING NUT FOR DEEPER VALVES SHALL BE EXTENDED TO COME UP TO 4 FOOT DEPTH BELOW FINISHED GRADE.

3 GATE VALVE & BOX DETAIL
N.T.S.

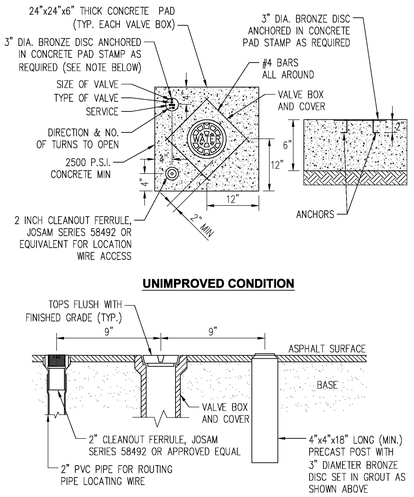

NOTE:
BRONZE IDENTIFICATION DISC SHALL BE REQUIRED FOR ALL VALVES.

4 VALVE BOX COLLAR
N.T.S.

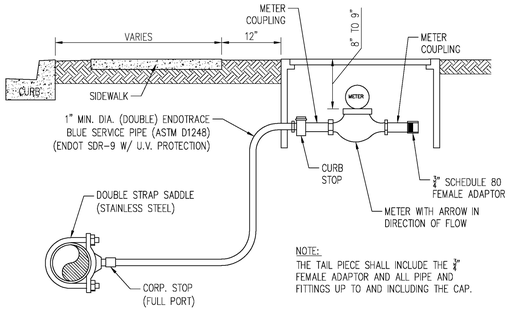

NOTE:
THE TAIL PIECE SHALL INCLUDE THE $\frac{3}{4}$" FEMALE ADAPTOR AND ALL PIPE AND FITTINGS UP TO AND INCLUDING THE CAP.

SERVICE SECTION
N.T.S.

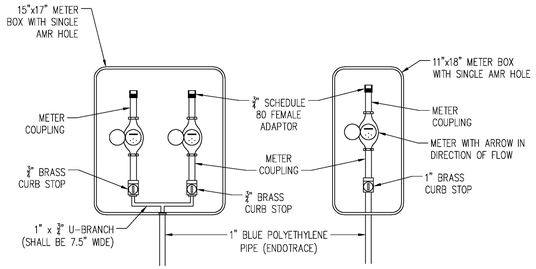

DOUBLE SERVICE (TOP VIEW) N.T.S. **SINGLE SERVICE (TOP VIEW)** N.T.S.

NOTES:

1. ALL FITTINGS BETWEEN THE WATER MAIN AND THE METER COUPLING SHALL BE BRASS WITH COMPRESSION/PACK JOINT CONNECTIONS.
2. NO SERVICE LINE SHALL TERMINATE UNDER A DRIVEWAY.
3. EACH SERVICE SHALL TERMINATE IN A METER BOX ASSEMBLY, WHICH SHALL BE PLACED TO GRADE IN THE UTILITY EASEMENT AT THE PROPERTY LINE(S) OF THE LOT(S) TO BE SERVED.
4. THE CONTRACTOR SHALL BE RESPONSIBLE FOR CONSTRUCTION TO AND INCLUDING THE METER BOX ASSEMBLY. THE CITY SHALL FURNISH THE METER AND THE TAIL PIECE. THE CONTRACTOR SHALL BE RESPONSIBLE FOR SETTING THE METER BOX ASSEMBLY TO FINISH GRADE AND MAKING ANY GRADE ADJUSTMENTS TO THE METER BOX IF REGRADING OCCURS.
5. ALL SERVICE LINES SHALL BE POLY ENDOTRACE PIPE AND SHALL BE BLUE IN COLOR W/WIRE.
6. THE POINT OF CONNECTION IS LOCATED ONE FOOT BEYOND THE METER BOX. THE PLUMBER/CUSTOMER SHALL BE RESPONSIBLE FOR MAINTENANCE BEYOND THE POINT OF CONNECTION.
7. IN NO CASE IS METER TO BE INSTALLED IN SIDEWALK OR OTHER PAVED AREAS.

6 WATER SERVICE DETAIL
N.T.S.

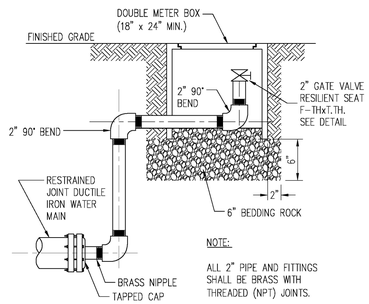

NOTE:

ALL 2" PIPE AND FITTINGS SHALL BE BRASS WITH THREADED (NPT) JOINTS.

5 BLOWOFF VALVE DETAIL
N.T.S.

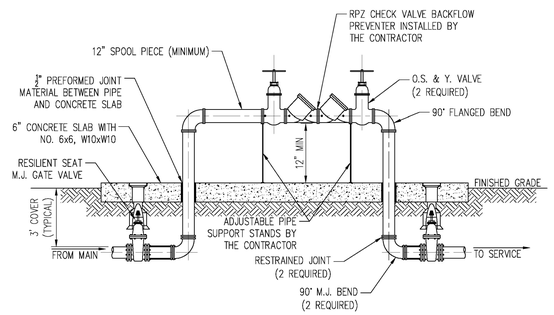

NOTES:

1. ALL PIPE AND FITTINGS 2" AND SMALLER SHALL BE THREADED SCHEDULE 80 PVC. NO GALVANIZED PIPE ALLOWED.
2. ALL PIPE LARGER THAN 2 INCH SHALL BE FLANGED DUCTILE IRON PIPE.
3. RECLAIMED WATER JUMPER SHALL BE SIZE ON SIZE.

7 RECLAIMED WATER JUMPER CONNECTION
N.T.S.

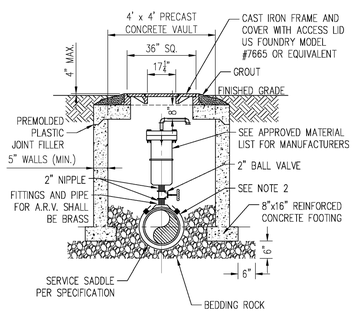

NOTES:

1. THE MINIMUM DIMENSION FROM TOP OF PIPE TO FINISHED GRADE SHALL BE 3.0 FEET.
2. DOUBLE STRAP SADDLE AND WRAP WITH TWO LAYERS OF WIDE PLASTIC OR POLY TAPE WITH STAINLESS STEEL STRAP.
3. PIPE INSTALLATION SHALL BE SUCH THAT THE A.R.V. IS LOCATED AT THE HIGHEST POINT IN THE RESPECTIVE SEGMENT.
4. INTERIOR AND EXTERIOR CONCRETE SURFACES SHALL RECEIVE PROTECTIVE COATING AS SPECIFIED FOR VALVE VAULTS.
5. CAST IRON FRAME, COVER AND ACCESS LID SHALL BE INSTALLED FLUSH WITH FINISHED GRADE.
6. COVER SHALL READ "WINTER GARDEN UTILITIES DIVISION AND "RECLAIMED WATER".
7. NO GALVANIZED PIPE/VALVES.

8 AIR RELEASE VALVE & VAULT
N.T.S.

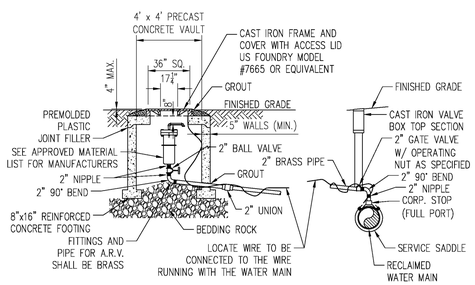

NOTES:

1. THE MINIMUM DIMENSION FROM TOP OF PIPE TO FINISHED GRADE SHALL BE 4.0 FEET.
2. DOUBLE STRAP SADDLE AND WRAP WITH TWO LAYERS OF WIDE PLASTIC OR POLY TAPE WITH STAINLESS STEEL STRAP.
3. PIPE INSTALLATION SHALL BE SUCH THAT THE A.R.V. IS LOCATED AT THE HIGHEST POINT IN THE RESPECTIVE SEGMENT.
4. INTERIOR AND EXTERIOR CONCRETE SURFACES SHALL RECEIVE PROTECTIVE COATING AS SPECIFIED FOR VALVE VAULTS.
5. CAST IRON FRAME, COVER AND ACCESS LID SHALL BE INSTALLED FLUSH WITH FINISHED GRADE.
6. COVER SHALL READ "WINTER GARDEN UTILITIES DIVISION, "SEWER" "RECLAIMED WATER OR POTABLE WATER".
7. NO GALVANIZED PIPE/VALVES.
8. LOCATE WIRE IN THE ARV VAULT SHALL BE SPLICED TO THE WIRE RUNNING WITH THE WATER MAIN AND EXCESS WIRE TO BE PLACED IN ARV VAULT. THE POINT OF CONNECTION AT THE MAIN SHALL HAVE A WATER PROOF CONNECTOR.

9 OFFSET AIR RELEASE VALVE ASSEMBLY
N.T.S.

WINTER GARDEN STANDARDS INCORPORATED WITH DESIGN ENGINEERS DOCUMENTS:

THE DETAILS, NOTES AND SPECIFICATIONS SHOWN ON THIS SHEET REPRESENT THE NOTED STANDARDS OF THE CITY OF WINTER GARDEN FOR CONSTRUCTION OF PUBLIC WORKS AND UTILITY INFRASTRUCTURE. BY INCLUDING THE STANDARDS, THE DESIGN ENGINEER HAS ACKNOWLEDGED THAT THEY ARE EFFECTIVE TO THE PROJECT AND THAT DETAILS, NOTES, OR SPECIFICATIONS ARE AS PROVIDED BY THE CITY AND HAVE NOT BEEN REVISED OR MODIFIED WITHOUT WRITTEN APPROVAL FROM THE CITY ENGINEER OR UTILITY DIRECTOR.

No.	ITEM	DATE
1	Water Meter Service	4/7/14
2	ARV Detail	4/7/14

REVISIONS

CITY OF WINTER GARDEN, FLORIDA
STANDARDS AND SPECIFICATIONS
FOR UTILITY CONSTRUCTION

WINTER GARDEN

STANDARD DETAILS
FOR
POTABLE WATER SYSTEMS

DATE
JANUARY 2024

SHEET
8