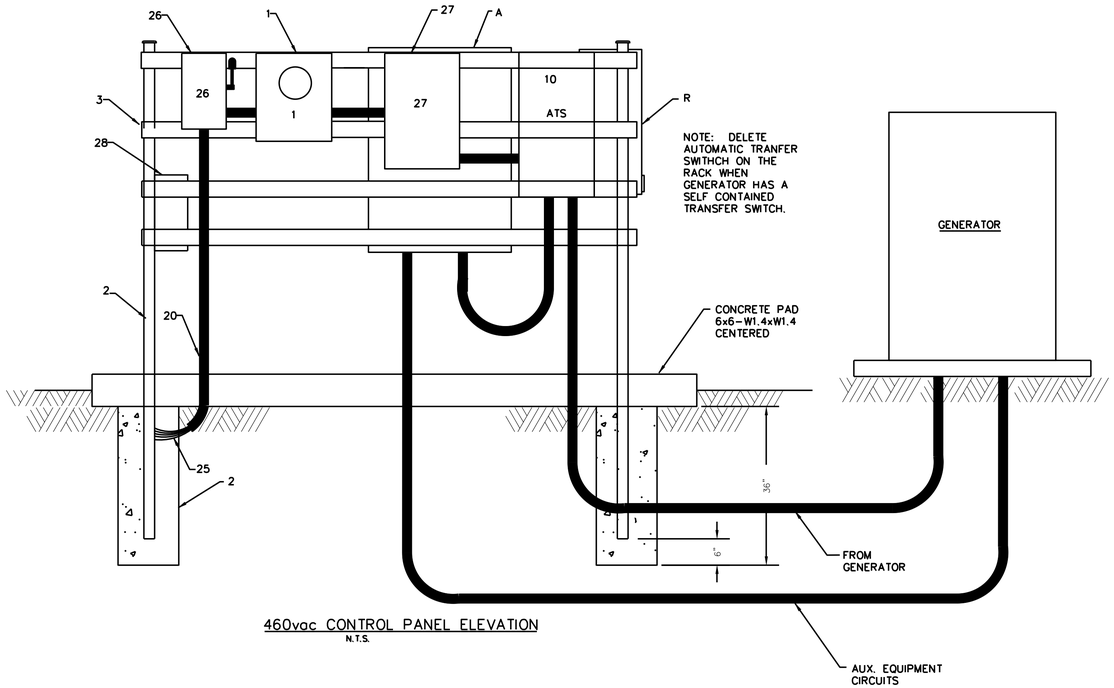

460vac CONTROL PANEL ELEVATION
N.T.S.

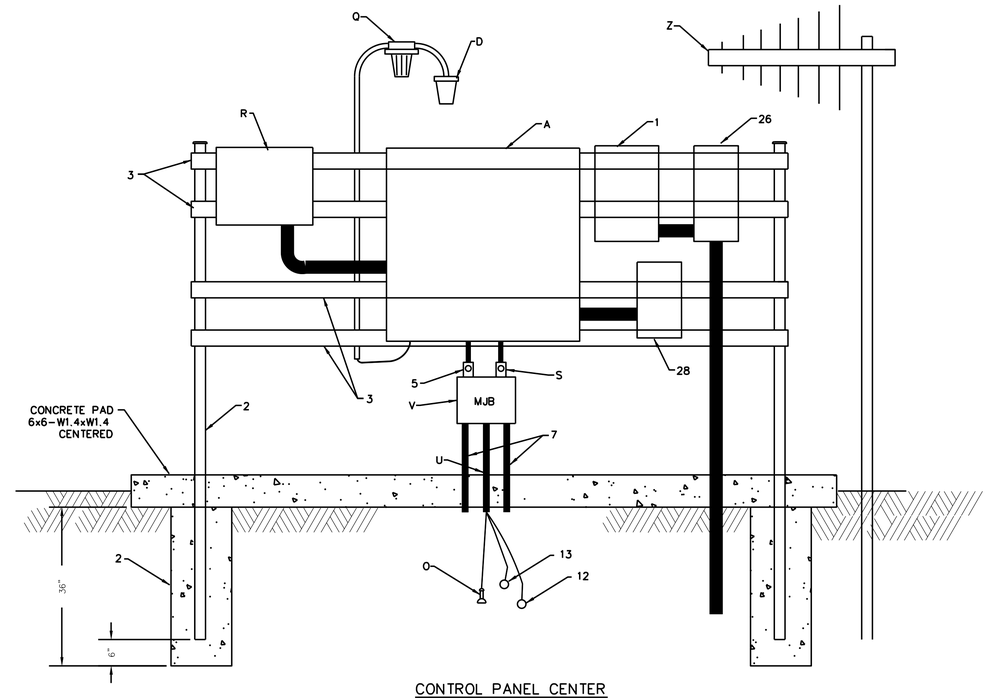

CONTROL PANEL CENTER
460v 3 ph
N.T.S.

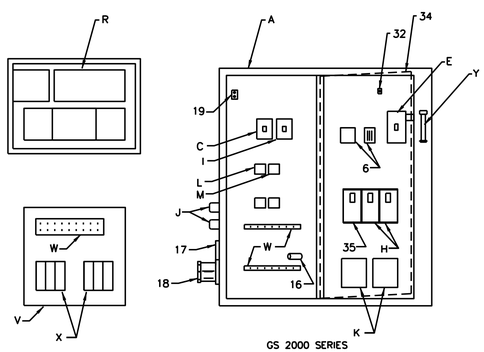

GS 2000 SERIES
SEWAGE LIFT STATION (TYPICAL)
460v PUMPS - INNER PANEL

A. PANEL ENCLOSURE NEMA 4x, 304 STAINLESS STEEL (30x26x8 IN)
B. LS150 PLC/RTU CONTROL PAKAGE
C. GFI/AREA LIGHT CIRCUIT BREAKER
D. AREA LIGHT
E. MAIN PANEL CIRCUIT BREAKER (480v)
F. GENERATOR RECEPTACLE (Pyle Nationol JRE 4100)
G. SURGE ARRESTOR
H. MOTOR CIRCUIT BREAKERS (230v)
I. CONTROL CIRCUIT BREAKER (120v)
J. SELECTOR SWITCHES (ALLEN-BRADLEY KEYED)
K. MOTOR STARTERS (SIEMENS HD)
L. CONTROL RELAY (11 PIN)
M. CONTROL RELAY (8 PIN)
N. ALARM TD RELAY (8 PIN)
O. TRANSDUCER ASSEMBLY
P. STARTER TD RELAY (8 PIN) OVER 30 HP DUPLEX
Q. ALARM LIGHT (Red)
R. RTU ENCLOSURE
S. 2 IN SEAL OFF (TRANSDUCER CORD)
T.
U. 2 IN PVC40 CONDUIT
V. MOTOR JUNCTION BOX
W. CONTROL/SENSORS TERMINAL STRIP
X. MOTOR TERMINAL BLOCKS
Y. PANEL BREAKER OPERATOR
Z. VHF ANTENNA
1. METER BASE
2. 2in GALV PIPE W/CAPS AND BASE ANCHORED IN CONC
3. 1 5/8in SQ. STEEL CHANNEL W/ PIPE CLAMPS & RUBBER ENDS CAPS
4. 1/2in RIGID GALV PIPE
5. 2 in SEAL OFF
6. PHASE MONITOR AND SUPPRESSER FUSES WITH BLOCK (500V)
7. 2 in PVC SCH 80 CONDUITS (PUMP CORDS))
8. NOT USED
9. PUMP CORD AND SENSOR ENTANCE INTO WET WELL
10. MAIN DISCONNECT/TRANSFER SWITCH
11. PVC AIR TUBE GUIDE, NM STRAPS & ANCHORS W/ STAINLESS SCREWS
12. LOW LIMIT BALL
13. HIGH LIMIT ALARM BALL
14. NOT USED
15. NOT USED
16. ALARM LIGHT FLASHER UNIT
17. AREA LIGHT SWITCH (W.P. FLUSH)
18. G.T.C.I. RECEPTACLE (W.P. BOX AND COVER)
19. CONTROL (X-2) LUG
20. 1 1/4in OR 1 1/2in PVC SCH 80 CONDUIT
21. 1 1/4in OR 1 1/2in PVC SCH 40 CONDUIT
22. 1/2in PVC SCH 40 CONDUIT
23. #4 BSD CU WIRE
24. 5/8in X 8ft GALV GROUD RODS
25. SERVICE ENTRANCE CABLE (See Spec Sheet)
26. 600v 100amp NF 3P SAFETY SWITCH
27. MAIN DISCONNECT 3R SINGLE BREAKER IN ENCLOSURE
28. 2KVA 230v X 120v TRANSFORMERS DRY (control & lighting)
29. 75KVA 460v X 230v 3ph TRANSFORMER
30. BUCK/BOOST TRANSFORMERS DRY 12/24v X240/480v
31. TYPE 3R WIRE TROUGH
32. EQUIPMENT GROUND LUG
34. DEAD FRONT INNER DOOR W/BARRIER (ALUMINUM) 460V SIDE ONLY
35. CIRCUIT BREAKER FOR LIGHTING & CONTROL TRANSFORMER (480V)

WINTER GARDEN STANDARDS INCORPORATED WITH DESIGN ENGINEERS DOCUMENTS:

THE DETAILS, NOTES AND SPECIFICATIONS SHOWN ON THIS SHEET REPRESENT THE NOTED STANDARDS OF THE CITY OF WINTER GARDEN FOR CONSTRUCTION OF PUBLIC WORKS AND UTILITY INFRASTRUCTURE. BY INCLUDING THE STANDARDS, THE DESIGN ENGINEER HAS ACKNOWLEDGED THAT THEY ARE EFFECTIVE TO THE PROJECT AND THAT DETAILS, NOTES, OR SPECIFICATIONS ARE AS PROVIDED BY THE CITY AND HAVE NOT BEEN REVISED OR MODIFIED WITHOUT WRITTEN APPROVAL FROM THE CITY ENGINEER OR UTILITY DIRECTOR.

REVISIONS			
No.	ITEM	DATE	
1	Control Panel & Notes	4/4/14	

City of Winter Garden, Florida
STANDARDS AND SPECIFICATIONS

WINTER GARDEN

STANDARD DETAILS
FOR
LIFT STATION - ELECTRICAL
460vac WYE

DATE
JANUARY 2008

SHEET
6

6 OF 10